HELI

Charger technology

- High Efficiency
  Charging efficiency higher than 95% meeting the requirements of energy saving and emissions reduction
- Speediness
  100% charging realized in 2 hours at the soonest
  Compatibility
- 48 v / 80 v compatibility meeting the demand of different voltage levels
  Safety
- Built-in mis-connecting protection offering self isolating function under fault;
  Perfect fault self checking alarm facilitating users maintenance .

(INMOTION)

Reliable special designed instrument

(ZAPI)

Reliable special meter display the whole truck' s working condition, fault detect and other important information completely which make the operator master the whole truck condition directly and conveniently.

Standard configuration

Standard mast
Standard fork
Class III standard carrier
Two-spools valve
Lithium battery
Full suspension seat
Overhead guard
Solid tyres
Traction pin
LED signal light, LED warning light(flashing)
USB interface
Automatic steering slow down device
Colour screen instrument (INMOTION)
GRAPHIC Display(ZAPI)

Optional device

Mast with other lifting height
Full free lift mast
Side shifter(Integral)
Other attachments
Fork with other length
No marking tyre
Cab
Left and right rearview mirror
Rear work light
Fire extinguisher
Rotating warning light, voice buzzer
Blue warning light
80V/800Ah lithium battery
HELI smart fleet management system

ANHUI HELI CO., LTD.
Add / No.668, FangXing Road, Hefei, China
Fax / +86-551-63639966
Tel / +86-551-63639068(America); 63639258(Europe);
63639358(Asia); 63662105(Africa & Middle East);
63639530(Key Accounts Division); 63662105(Wheel loader)

* Our products are subject to improvements and changes without notice.

Catalog No.200108 Fokaili Print

HELI

4-5 t LITION

G3 series Lithium Battery Powered Counterbalanced Forklift Truck

www.heliforklift.net

G3 SERIES 4-5 t LITION

Perfect Combination of Aesthetics and Functional Design

New generation with characteristics of smart, safe, high efficiency, energy saving and environment friendly

High Reliability

- High IP Protection Level of Vehicle.
- Maintenance-free integrated axle which is mature and has been tested by market is used on the truck.
- Oil-cooled wet disc type brake is free from maintenance.
- Maintenance-free AC motors are used for driving and pump motors.
- World famous controller is used.
- Large smart instrument can monitor the truck state overally and it is safe and reliable.

High Safety

- Tail-free structure reduces the center of gravity and improves lateral stability.
- High strength and integrated type welded overhead guard improves safety.
- Side-pulling battery changing way is standard configuration and improves battery changing efficiency.
- Middle-positioned battery reduces the center of gravity and improves stability .
- High positioned rotation point of rear axle improves lateral stability of the truck.
- Automatic deceleration when steering improves working safety .
- Mast lifting buffering improves operation safety.

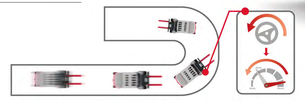

Turn automatically slow down

Suitable for working in both high and low environment

- Lithium battery is better than lead-acid battery when working between -25℃ and 55℃.

Maintenance Free

- Unnecessary of fluid adding and dust proofing
- Daily maintenance free
- Manual maintenance free

Long Service Life

- Over 75% capacity reserved
- After 4000 shifts operation.
- Longer service life than lead-acid battery in equal working condition. 5 years or ten thousand hours quality guarantee for high performance lithium battery assembly.

High Efficiency and Energy Saving

- 2-3 hours charging meet 6-8 hours working demand.
- High-energy density, self discharging rate lower than 1% per month.
- 95% energy conversion rate,superior charging and discharging performance.
- Flexible to charge, easy to operate, no impact on battery life.
- Unnecessary to change battery, cost saving.

Improved man-machine comfort

- Mast lifting and falling buffering makes operation safe and comfortable.
- The truck has lower pedal height and larger egress and ingress space.
- Suspension seat and wide view mast improve driving experience.
- Optimal battery layout and design of counterbalance improve the rear view.
- Lower layout of tilting cylinder improves the space for legs.

G3 SERIES 4-5 t LI ION

Manufacturer's Data and Design Characteristics

	Character					
1.01	Manufacturer			HELI		
1.02	Model			CPD40	CPD45	CPD50
1.03	Configuration number			GB2Li/GB3Li	GB2Li/GB3Li	GB2Li/GB3Li
1.04	Rated capacity	Q	kg	4000	4500	5000
1.05	Load center distance	c	mm	500	500	500
1.06	Power mode			Lithium battery	Lithium battery	Lithium battery
1.07	Driving mode			Seated	Seated	Seated
1.08	Wheel base	L1	mm	1960	1960	1960
	Tyre					
2.01	Tyre type			Solid tyre	Solid tyre	Solid tyre
2.02	Wheel number (front/rear)			2/2	2/2	2/2
2.03	Front wheel base	W3	mm	1120	1120	1189
2.04	Rear wheel base	W4	mm	1070	1070	1070
2.05	Tyre (front)			250–15	250–15	28×12.5–15
2.06	Tyre (rear)			21X8–9	21X8–9	21X8–9
	Size					
3.01	Front overhang	L2	mm	560	560	560
3.02	Mast tilt angle，front/rear	α/β	°	6/8	6/8	6/8
3.03	Height with mast retraction	H1	mm	2240	2240	2230
3.04	Free lifting height	H3	mm	150	150	150
3.05	Max.lifting height	H	mm	3000	3000	3000
3.06	Max.height under working condition	H2	mm	4235	4235	4225
3.07	Overhead guard height	H4	mm	2275	2275	2270
3.08	Fork size：thickness×width×length	TxWxL4	mm	50×150×1070	50×150×1070	50×150×1070
3.09	Fork arm carrier，DIN standard			3A	3A	3A
3.10	Truck body length (fork excluded)	L，	mm	2920	2920	2920
3.11	Truck body width	W1	mm	1350	1350	1500
3.12	Turning radius	r	mm	2580	2580	2580
3.13	Clearance between mast and ground	H5	mm	140	140	130
3.14	Clearance between wheel base center and ground (loaded)	H6	mm	145	145	135
3.15	Right angle stacking aisle width (pallet1000×1000mm，clearance 200mm)	Ast	mm	4340	4340	4340
3.16	Right angle stacking aisle width (pallet1200×1200mm，clearance 200mm)	Ast	mm	4540	4540	4540
	Performance					
4.01	Travelling speed：loaded/unloaded		km/h	13/14	13/14	13/14
4.02	Lifting speed：loaded/unloaded		mm/s	310/450	280/450	260/450
4.03	Lowering speed：loaded/unloaded		mm/s	500/450	500/450	500/450
4.04	Gradeability (loaded)		%	16/27	15/26	14/25
4.05	Max.traction force (loaded)		N	21000	21000	21000
4.06	Acceleration time (10m) loaded/unloaded		s	6.58/6.25	6.70/6.19	6.82/6.14
	Weight					
5.01	Total weight(with/without battery)		kg	6670/6085	6835/6150	7210/6525
5.02	Axle load:unloaded front/rear		kg	3195/3505	3215/3620	3345/3865
5.03	Axle load:loaded front/rear		kg	9415/1310	10200/1135	11210/1035
	Battery					
6.01	Battery voltage/capacity		V/Ah	80/542	80/606	80/606
6.02	Battery weight		kg	585	685	685
	Motor and controller					
7.01	(S2–60min) Drive motor power(S2–60min)		kW	20	20	20
7.02	(S3–15%)Lifting motor power(S3–15%)		kW	26.5	26.5	26.5
7.03	(S3–15%) Steering motor power(S3–15%)		kW	2.5	2.5	2.5
7.04	Drive motor controlling mode			MOSFET/AC	MOSFET/AC	MOSFET/AC
7.05	Lifting motor controlling mode			MOSFET/AC	MOSFET/AC	MOSFET/AC
7.06	Steering motor controlling mode			MOSFET/AC	MOSFET/AC	MOSFET/AC
	Others					
8.01	Service brake/parking brake			Hydraulic/mechanical	Hydraulic/mechanical	Hydraulic/mechanical
8.02	Hydraulic system working pressure		Mpa	20	20	21.5
8.03	Type of drive control			ZAPI/INMOTION	ZAPI/INMOTION	ZAPI/INMOTION

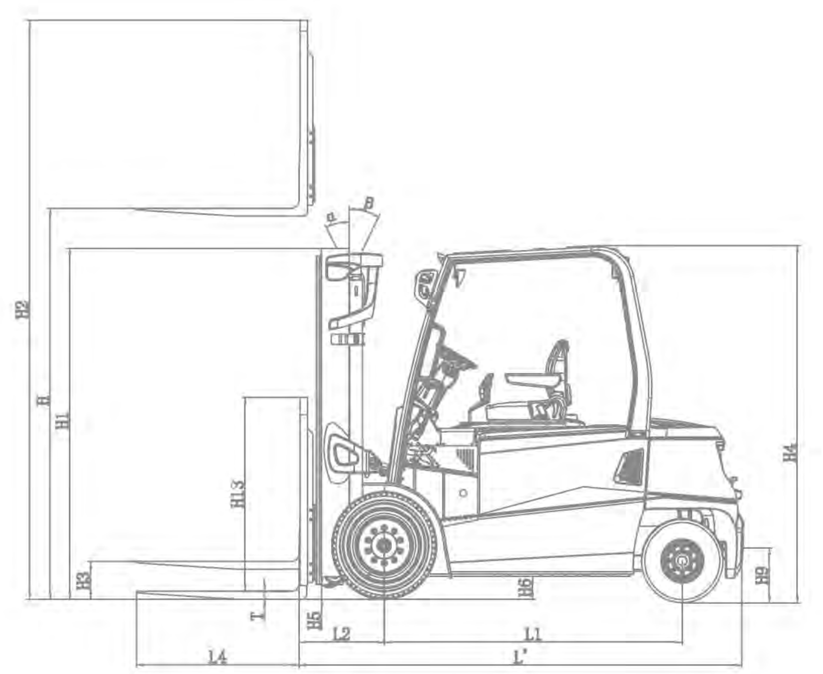

Ast: Right angle stacking aisle width a: Clearance,200mm

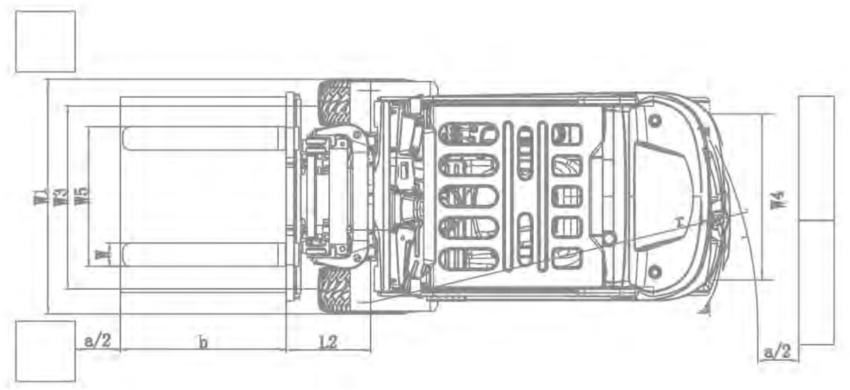

Note: The vertical axis stands for load capacity and the horizontal axis stands for load center which is calculated from the front surface of the forks to the gravity of the standard load. the standard load means a cubic with 1000mm edge length. When mast is tilted forward, using non-standard forks or loading large goods, the load capacity will be reduced. The load capacity of standard mast at different load center can be known from this load chart.

HELI smart fleet management system (Optional)

- Vehicle positioning
- Remote diagnosis
- Remote monitoring
- Maintenance reminder
- Battery management
- Statistical form
- Vehicle management
- Identification recognition (optional)
- Weight management (optional)
- Collision management (optional)

WIDE VIEW MAST

Mast model	Max. lifting height (mm)	Load capacity (Load center 500mm) (kg)			Mast overall height (Fork to the ground) (mm)		Free lift	Service weight (kg)			Mast tilt angle
		CPD40	CPD45	CPD50	Mast lowered (mm)	Fork lifted (with backrest) (mm)		CPD40	CPD45	CPD50	Front/rear
M250	2500	4000	4500	5000	1980	3733	150	6615	6780	7155	6-8°
M300	3000	4000	4500	5000	2230	4233	150	6670	6835	7210	6-8°
M330	3300	4000	4500	5000	2380	4533	150	6700	6865	7240	6-8°
M350	3500	4000	4500	5000	2480	4733	150	6720	6885	7260	6-8°
M370	3700	4000	4450	4900	2580	4933	150	6745	6910	7285	6-8°
M400	4000	4000	4350	4750	2780	5233	150	6785	6950	7325	6-8°
M425	4250	4000	4250	4650	2905	5483	150	6810	6975	7350	6-8°
M450	4500	4000	4150	4500	3030	5733	150	6840	7005	7380	6-8°
M475	4750	3900	4100	4400	3155	5983	150	6865	7030	7405	6-8°
M500	5000	3800	4000	4300	3280	6233	150	6895	7060	7435	6-8°
M550	5500	3650	3800	4150	3580	6733	150	6955	7120	7495	6-5°
M600	6000	3400	3450	3850	3830	7233	150	7010	7175	7550	3-5°

Free lift without backrest will increase by 271mm.

WIDE VIEW FULL FREE 2-STAGE MAST

Mast model	Max. lifting height (mm)	Load capacity (Load center 500mm) (kg)			Mast overall height (Fork to the ground) (mm)		Free lift (with backrest)	Service weight (kg)			Mast tilt angle
		CPD40	CPD45	CPD50	Mast lowered (mm)	Fork lifted (with backrest) (mm)		CPD40	CPD45	CPD50	Front/rear
ZM250	2500	4000	4500	5000	1980	3733	777	6710	6875	7250	6-8°
ZM261	2610	4000	4500	5000	2035	3792	832	6720	6885	7260	6-8°
ZM300	3000	4000	4500	5000	2230	4233	1027	6770	6935	7310	6-8°
ZM330	3300	4000	4500	5000	2380	4533	1177	6803	6968	7343	6-8°
ZM350	3500	4000	4500	4900	2480	4733	1277	6833	6998	7373	6-8°
ZM370	3700	4000	4400	4800	2580	4933	1377	6865	7030	7405	6-8°
ZM400	4000	4000	4300	4650	2780	5233	1577	6915	7080	7455	6-8°
ZM425	4250	4000	4200	4550	2905	5483	1702	6945	7110	7485	6-8°
ZM450	4500	3950	4100	4450	3030	5733	1827	6983	7148	7523	6-8°
ZM475	4750	3850	4050	4350	3155	5983	1952	7015	7180	7555	6-8°
ZM500	5000	3750	3950	4250	3280	6233	2077	7050	7215	7590	6-8°
ZM550	5500	3600	3750	4100	3580	6733	2377	7115	7280	7655	6-5°
ZM600	6000	3350	3400	3800	3830	7233	2627	7170	7335	7710	3-5°

Free lift without backrest will increase by 271mm.

WIDE VIEW FULL FREE 3-STAGE MAST

Mast model	Max. lifting height (mm)	Load capacity (Load center 500mm) (kg)			Mast overall height (Fork to the ground) (mm)		Free lift (with backrest)	Service weight (kg)			Mast tilt angle
		CPD40	CPD45	CPD50	Mast lowered (mm)	Fork lifted (with backrest) (mm)		CPD40	CPD45	CPD50	Front/rear
ZSM360	3600	4000	4350	4900	1930	4833	727	6915	7080	7455	6-8°
ZSM400	4000	3950	4200	4750	2070	5233	867	6965	7130	7505	6-8°
ZSM435	4350	3850	4050	4450	2180	5583	977	6995	7160	7535	6-8°
ZSM450	4500	3800	4000	4400	2230	5733	1027	7015	7180	7555	6-8°
ZSM470	4700	3700	3950	4300	2345	6033	1142	7040	7205	7580	6-8°
ZSM500	5000	3600	3850	4200	2480	6233	1277	7085	7250	7625	6-8°
ZSM540	5400	3450	3700	4050	2615	6633	1412	7215	7380	7755	6-5°
ZSM600	6000	3250	3350	3650	2850	7233	1647	7305	7470	7845	6-5°
ZSM650	6500	2650	2750	3150	3015	7733	1812	7365	7530	7905	6-5°
ZSM700	7000	2150	2250	2650	3215	8233	2012	7435	7600	7975	3-5°

Free lift without backrest will increase by 380mm.