制造商和技术参数 Manufacturer's Data and Design Characteristics

	特性	Character				
1.01	制造厂商	Manufacturer			HELI	
1.02	型号	Model			CQD20	CQD25
1.03	配置号	Configuration number			GC2R	GC2R
1.04	额定承载能力	Load capacity	Q	kg	2000	2500
1.05	载荷中心距	Load center distance	C	mm	500	
1.06	动力形式	Power mode			蓄电池 Battery	
1.07	驾驶方式	Driving mode			站驾 Stand-on	
1.08	轴距	Wheel base	Y	mm	1515	1685
	轮胎	Tyre				
2.01	轮胎类型	Tyre type			聚氨酯 Polyurethane	
2.02	轮胎数量 驱动轮/辅助轮/承重轮(X=驱动轮)	Wheel number, drive/caster/load (X=drive wheel)			1x/2/2	
2.03	轮距(承载轮)	Track Width,load	b3	mm	1078	
2.04	承载轮尺寸	Wheel size，load		mm	ø285x100	
2.05	驱动轮尺寸	Wheel size，drive		mm	ø330x114	
2.06	辅助轮尺寸	Wheel size，caster		mm	ø178x76	
	尺寸	Size				
3.01	标准门架起升高度	Lift height	h3	mm	3300	3300
3.02	自由起升高度	Free lift	h2	mm	80	80
3.03	门架落地高度	Mast height，lowered	h1	mm	2424	2424
3.04	货叉尺寸，厚度/宽度/长度	Fork size，thickness/width/length	s/e/l	mm	40x122x920	40x122x1070
3.05	货叉调节宽度	Fork adjusting width		mm	244～722	244～722
3.06	货叉侧移量	Fork sideshifting		mm	±55	±55
3.07	车体长度(不含货叉)	Truck body length(fork excluded)	L	mm	1906	2076
3.08	车体宽度	Truck body width	b1	mm	1190	1190
3.09	支腿内宽	Distance between support arms	b2	mm	846	846
3.10	前移距离	Reach distance	l4	mm	675	845
3.11	护顶架高度	Height of overhead guard	h4	mm	2250	2250
3.12	最小离地间隙(门架处)	Ground clearance,below mast	m2	mm	83	83
3.13	最小转弯半径	Turning radius	Wa	mm	1795	1965
3.14	货叉前端面至承载轮中心距离	Distance from fork front tip to center of load wheel	X	mm	467	637
3.15	直角堆垛宽度 (托盘1100Lx1100W,间隙200)	Aisle width with pallet 1100Lx1100W,clearance 200	Ast	mm	2835	2885
3.16	直角堆垛宽度 (托盘1000Lx1100W,间隙200)	Aisle width with pallet 1000Lx1100W,clearance 200	Ast	mm	2760	2825
	性能	Performance				
4.01	行驶速度，满/空载	Travelling speed,with/without load		km/h	10/11.5	10/11.5
4.02	起升速度，满/空载	Lifting speed,with/without load		m/s	0.3/0.45	0.27/0.45
4.03	下降速度，满/空载	Lowering speed,with/without load		m/s	0.5/0.45	0.5/0.45
4.04	前移速度，满/空载	Reach speed,with/without load		m/s	0.1/0.1	0.1/0.1
4.05	最大爬坡能力，满/空载	Maximum climbing ability,with/without load		%	10/15	10/15
	重量	Weight				
5.01	整车自重(含蓄电池)	Total weight(with battery)		kg	3200	3250
	蓄电池	Battery				
6.01	蓄电池电压/蓄电池容量k5	Battery voltage/capacity k5		V/Ah	48/420	48/450
6.02	蓄电池重量	Battery weight		kg	750	780
6.03	蓄电池箱体尺寸	Battery box dimension		mm	1035x352x784	11035x352x784
	电机及控制	Motor and controller				
7.01	驱动电机功率	Drive motor power		kw	5	5
7.02	起升电机功率	Lifting motor power		kw	10	10
7.03	转向电机功率	Steering motor power		kw	0.6	0.6
7.04	驱动控制方式	Type of driving control			MOSTET/AC	
7.05	起升控制方式	Type of lifting control			MOSTET/AC	
7.06	转向控制方式	Type of steering control			MOSTET/AC	
7.07	变速箱	Transmission box			合力专用变速箱 HELI special transmission box	
7.08	行车制动	Service brake			电制动 Electrical	

注：蓄电池具体品牌及其容量大小，请咨询销售或技术人员。
NOTE：Detailed information about battery,please contact our salesmen or engineer.

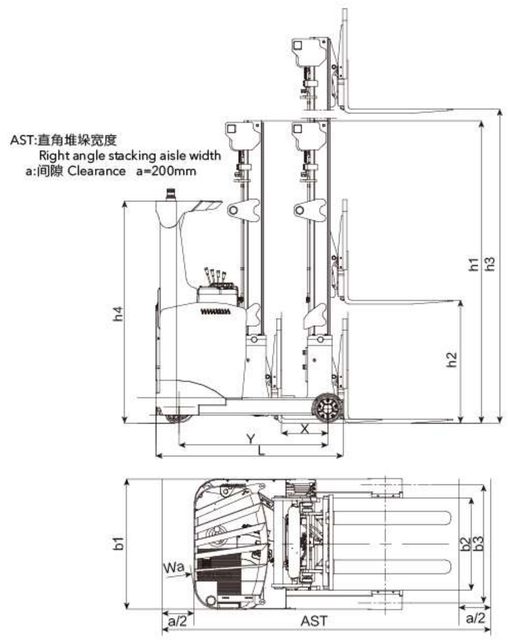

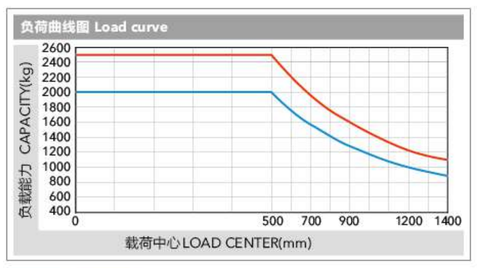

2 t　　2.5 t

注：竖轴表示承载量，横轴表示载荷中心。载荷中心是从货叉正面计算起，标准载荷的基点是指负荷边长为1000毫米的立方体中心位置。当门架前倾、使用非标准货叉或装载超过正常宽度的负荷时，将会使承载量减少。通过负荷曲线图，能及时地了解标准门架在各种载荷中心时的承载能力。

Note：The vertical axis stands for load capacity and the horizontal axis stands for load center which is calculated from the front surface of the forks to the gravity of the standard load. the standard load means a cubic with 1000mm edge length. When mast is tilted forward, using non-standard forks or loading large goods, the load capacity will be reduced. The load capacity of standard mast at different load center can be known from this load chart.

配置号 Configuration number	配置	Configuration
GC2R	手动换向阀	Manually operated valve
	机械手柄控制液压功能	Mechanical handle control hydraulic functions
	ZAPI行走电机控制器	ZAPI travelling motor controller
	ZAPI起升电机控制器	ZAPI lifting motor controller
	ZAPI转向电机控制器	ZAPI steering motor controller

宽视野三节全自由门架 WIDE VIEW FULL FREE 3–STAGE MAST

门架型号 Mast model	起升高度h3 Lifting height（mm）		自由起升高度h2 Free lifting height(mm)		门架落地高度h1 Mast height，lowerd(mm)		额定起重量 Load capacity(kg)		门架倾角(前/后) Mast tilt angle (front/rear) α / β
	CQD20	CQD25	CQD20	CQD25	CQD20	CQD25	CQD20	CQD25	
ZSM360	3600	3600	980	980	2005	2005	2000	2500	2°/4°
ZSM400	4000	4000	1110	1110	2138	2138	2000	2500	2°/4°
ZSM430	4300	4300	1210	1210	2238	2238	1900	2400	2°/4°
ZSM460	4600	4600	1310	1310	2338	2338	1900	2400	2°/4°
ZSM480	4800	4800	1380	1380	2405	2405	1800	2300	2°/4°
ZSM540	5400	5400	1580	1580	2605	2605	1500	2000	2°/4°
ZSM570	5700	5700	1680	1680	2705	2705	1450	1950	2°/4°
ZSM600	6000	6000	1780	1780	2805	2805	1400	1900	2°/4°
ZSM650	6500	6500	1947	1947	2972	2972	1300	1800	2°/4°

宽视野基本型门架 WIDE VIEW MAST

门架型号 Mast model	起升高度h3 Lifting height（mm）		自由起升高度h2 Free lifting height(mm)		门架落地高度h1 Mast height，lowerd(mm)		额定起重量 Load capacity(kg)		门架倾角(前/后) Mast tilt angle (front/rear) α / β
	CQD20	CQD25	CQD20	CQD25	CQD20	CQD25	CQD20	CQD25	
M250	2500	2500	80	80	2024	2024	2000	2500	2°/4°
M270	2700	2700	80	80	2124	2124	2000	2500	2°/4°
M300	3000	3000	80	80	2274	2274	2000	2500	2°/4°
M330	3300	3300	80	80	2424	2424	2000	2500	2°/4°
M360	3600	3600	80	80	2574	2574	2000	2500	2°/4°
M400	4000	4000	80	80	2774	2774	2000	2500	2°/4°
M430	4300	4300	80	80	2924	2924	1900	2400	2°/4°
M460	4600	4600	80	80	3074	3074	1900	2400	2°/4°
M500	5000	5000	80	80	3274	3274	1800	2300	2°/4°
M540	5400	5400	80	80	3474	3474	1500	2000	2°/4°

HELI合力

可靠的专用仪表 Reliable special designed instrument

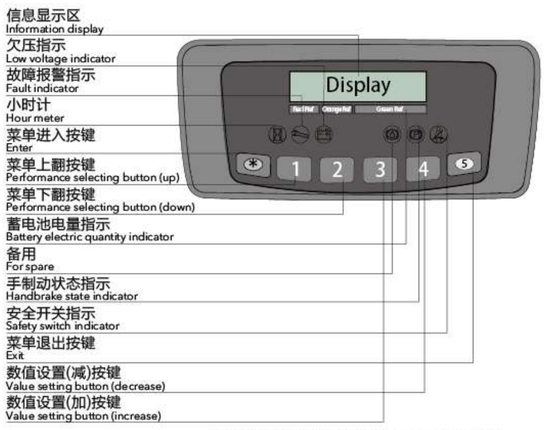

ZAPI标准仪表(用于配置号为GC2R的车型)
ZAPI standard type meter (for GC2R model)

可靠的专用仪表将整车运行状态，故障检测等重要信息完整地显示出来，使操作者更直观、方便地了解车辆状态。

The reliable special instrument gives a complete display of the vital information, like operation status, fault detection, etc. It ensures the operator predominate the vehicle status more intuitive and convenient.

合力智能车队管理系统(选配) HELI smart fleet management system (optional)

- 车辆定位 • Vehicle positioning
- 远程诊断 • Remote diagnosis
- 远程监控 • Remote monitoring
- 维保提示 • Maintenance reminder
- 电池管理 • Battery management
- 统计报表 • Statistical form
- 车辆管理 • Vehicle management
- 身份识别(选配) • Identification recognition (optional)
- 称重管理(选配) • Weight management (optional)
- 碰撞管理(选配) • Collision management (optional)

能量再生技术 RENEWABLE ENERGY TECHNOLOGIES

应用交流控制能量再生技术，叉车更节能，蓄电池单作业循环时间最大延长15%。

With the use of AC controlling renewable energy technologies, the forklift is more energy-saving and the working hour of the battery is extended by 15%.

15%

安徽合力股份有限公司
ANHUI HELI CO., LTD.
地址 / 中国 合肥方兴大道668号
Add / No.668, FangXing Road, Hefei, China
邮编 (Post Code) / 230000
客服热线 (Customer Service Hotline) / 4001-600761
服务电话 (Service Tel) / +86-551-63689000,63648005

设计印刷：孝可立印务 191011

HELI合力

2-2.5 t

G2系列站式交流蓄电池前移式叉车

G2 SERIES AC ELECTRIC REACH TRUCK (STAND-ON TYPE)

www.helichina.com

G2 系列/ SERIES 2-2.5 t

三相交流电机技术
Three phase AC type motor technology

- 行驶，起升和转向均采用三相交流电机控制
- 强大的加速性
- 变换行驶方向灵敏迅速无迟钝
- 无碳刷的免维护电机寿命更长，维护费用更低，减速时进行能量回充，操作时间更长

- Three phase AC type motor control on travelling, lifting and steering
- Good acceleration
- Fast and sensitive respond on travel direction shifting
- Free from maintenance motor without carbon brush having long service life and low maintenance cost
- Energy regenerating during deceleration extending operation hours

全新的液压设计
Newly designed hydraulic system

- 全新的液压设计，使液压系统的工作效率更高
- 大功率的起升电机
- MOSFET起升调速电控
- 新型无侧隙齿轮技术低噪音齿轮泵，工作效率高，使用寿命长

- Newly designed hydraulic system with high working efficiency
- High power lifting motor
- MOSTET lifting speed governing electric controller
- New type low noisy gear pump, high efficiency and long life

更加优化的智能型设计
Optimized intelligent design

- CAN总线技术
- 坡道停车自制动
- 操作顺序保护
- 行驶速度控制
- 起升速度控制
- 电控自保护
- 与行驶互锁的脚踏开关

- CAN bus technology
- Parking brake on slope
- Operation sequence protection
- Travelling speed control
- Lifting speed control
- Electric controller self protection
- Dead-man footswitch traction interlock

先进的EPS电子动力转向
Advanced EPS electric powered steering

- EPS电子动力转向，为整车提供了轻便灵活，高效静音的操作
- 转向电机控制器
- 自动对中功能
- 转向自动限制速度和加速度

- EPS electric powerd steering offering easy, flexible, high efficient and mute operation
- Steering motor controller
- Automatic centering function
- Automatic limit on speed and accelerated speed when steering

操作轻便的拇指开关
Easy operated thumb switch

- 拇指开关控制行驶功能
- 操作功能部件功能明确并且一目了然

- To control travelling functions
- Clear operating units

六套独立的制动系统
Six independent braking systems

- 释放加速手柄启动行驶制动
- 松开脚踏开关启动紧急行驶制动
- 按钮触发的驻车制动
- 自动启动的驻车制动
- 液压手柄触发的驻车制动
- 紧急断电开关

- Automatic braking when accelerator lever is released
- Emergency brake activated by releasing foot switch
- Parking brake activated by pressing button on the panel
- Automatic hold-on brake
- Parking brake activated by hydraulic control lever
- Emergency isolator





舒适的驾驶舱
Comfort cab

- 司机的身体受到车体的全面保护
- 驾驶室配有腰部、头部及肘部支撑
- 重要操作部分均触手可及

- The driver's body is fully protected within the truck contours
- Padded waist,head and arm supports
- Easy reach to important operation

护顶架
Overhead guard

- 护顶架立柱后置保护司机并改善作业视野
- 顶部栅栏板方式使驾驶人员有更宽阔的视野
- 前环梁倾斜视角设计更符合人眼睛视觉角度

- Overhead guard support for improved operator protection and enhanced visibility to the load
- Fence on top of the overhead guard offering driver wide view
- Beveled view angle design with front ring beam meeting humanized requirements

操作显示器
Displayer

- 高品质的控制仪表可显示绝大多数重要的运行参数
- 180度转角位置显示
- 电瓶电量情况与故障代码显示
- 选择行驶模式
- 起升锁止指示
- 小时计
- 工时显示

- High quality meter displaying important operating data
- 180° steering angle position display
- Display of battery power and fault code
- Travelling mode selection
- Lifting lock indication
- Hour meter
- Labor hour display

宽视野门架
Wide view mast

- 在负载方面拥有绝佳的视野
- 整体式侧移器
- 起升高位时，剩余载荷大
- 起升极限缓冲
- 门架前移与后移极限缓冲
- 货叉倾斜
- 起升高度系列范围:2500–6500mm

- Good view when loaded
- Integral sideshifter
- High residual load capacity at high lift height
- Buffering on lifting limit
- Buffering on mast moving forward and backward limit
- Fork tilt
- Lift height range:2500-6500mm

标准配置 Standard configuration

AC行走电机	AC travelling motor
AC起升电机	AC Lifting motor
AC转向电机	AC steering motor
电制动	Electrical brake
DC/DC转换器	DC/DC converter
低噪声齿轮泵	Low noisy gear pump
四片阀	Control valve(four throw)
3300mm两节基本型门架	3300mm two-stage mast
整体式侧移器	Integral sideshifter
标准货叉	Standard fork
挡货架	Backrest
聚氨酯轮胎	Polyurethane tyre
LED液晶仪表	LED meter
前工作灯	Front working light
蓄电池垂直更换	Vertical battery change
警示灯	Warnning light

选用装置 Optional device

三节全自由门架	Three-stage full free lift mast
其他高度两节基本型门架	Two-stage mast(other lifting height)
其他长度货叉	Fork with other length
货叉套	Fork extension
监控系统	Monitoring system
其他蓄电池	Other battery
蓄电池充电器	Battery charger
其他车体颜色	Alternative colour schemes
电池侧面更换	Battery on rollers for rapid side battery change